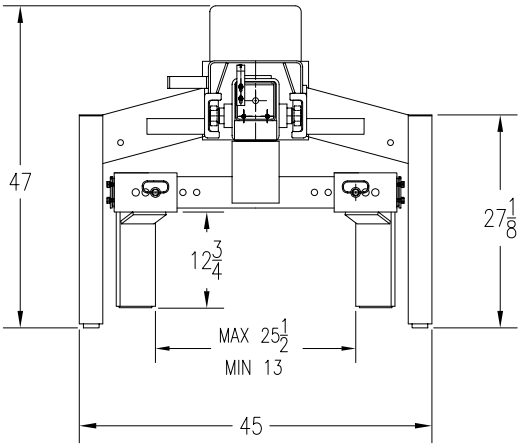

CAPACITY PER COLUMN – 18,000 lbs
LIFTING HEIGHT UP TO 69"
LIFTING SPEED – 69 seconds
ELECTRIC/HYDRAULIC SYSTEM
AUTOMATIC MULTI-POSITION MECHANICAL LOCK
HYD. OPERATED THIRD WHEEL
ADJUSTABLE FORKS (13" TO 25-1/2" INSIDE)
STEEL ROLLERS, 7/8" THICK CHANNEL

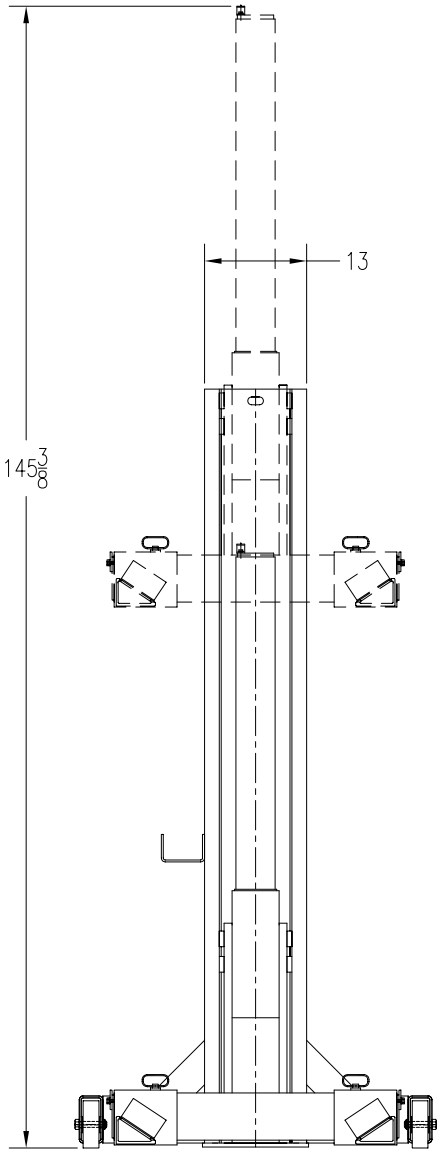

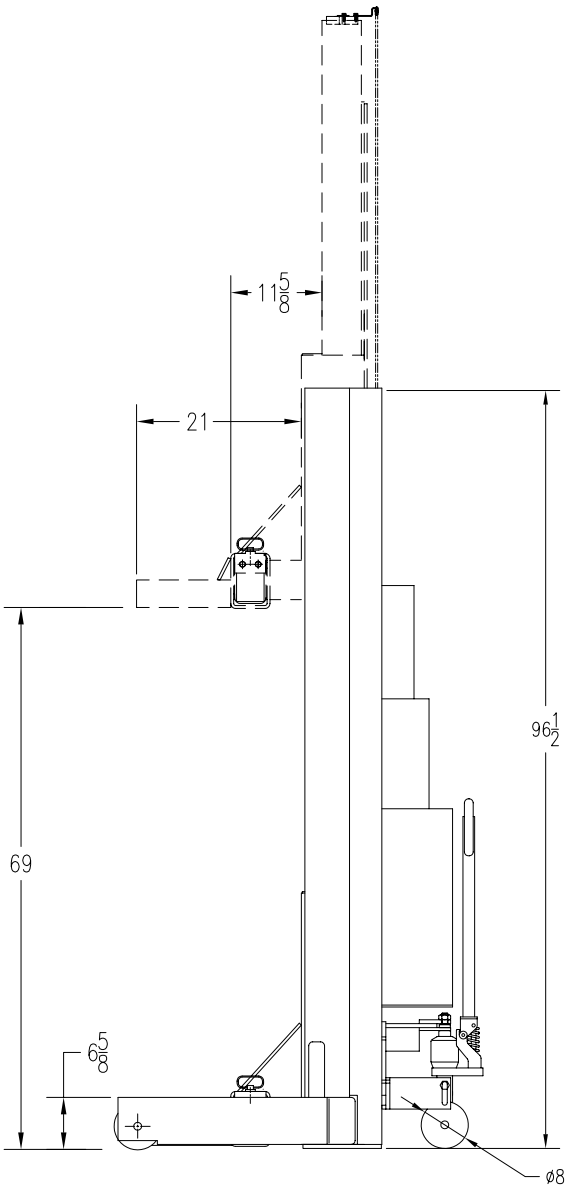

MOBILE LIFT COLUMN
MODEL:PKMC18-4